Coupling Link JDT TBS

Product information

Coupling link for assembling chainslings.

Marking: According to standard
Finish: Red painted.
Standard: EN 1677-1

Safety factor: 4:1.
Grade: 8

Part Code	Code	WLL ton	a mm	b mm	c mm	d mm	e mm	g mm	t mm	Weight kg
11.050352106000	TBS 6	1.12	11	19	40	8	17	17	45	0.08
11.050352108000	TBS 8	2	14	22	53	11	22	21	59	0.17
11.050352110000	TBS 10	3.15	18	29	68	12	26	28	70	0.3
11.050352113000	TBS 13	5.3	23	33	77	16	32	30	87	0.6
11.050352116000	TBS 16	8	27	40	94	22	39	35	103	1.18
11.050352118000	TBS 18	10	37	51	120	23	48	48	125	1.58
11.050352120000	TBS 20	12.5	37	50	112	24	47	45	125	2
11.050352122000	TBS 22	15	40	54	120	28	52	48	133	2.64
11.050352126000	TBS 26	21.2	50	70	161	30	65	61	168	5.04
11.050352132000	TBS 32	31.5	55	79	186	34	73	71	190	6.84
11.050352136000	TBS 36	40	70	97	227	46	84	85	235	15.6
11.050352140000	TBS 40	50	70	97	227	46	84	85	235	15.6
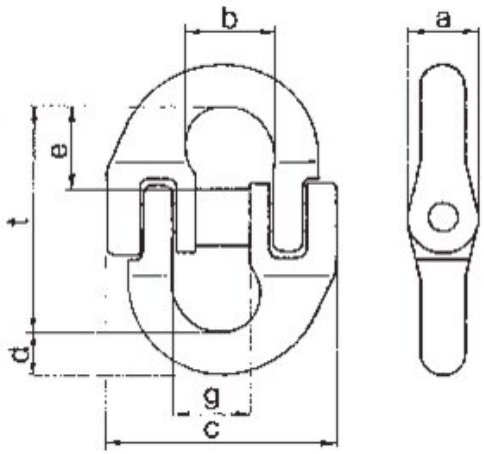
Blueprint